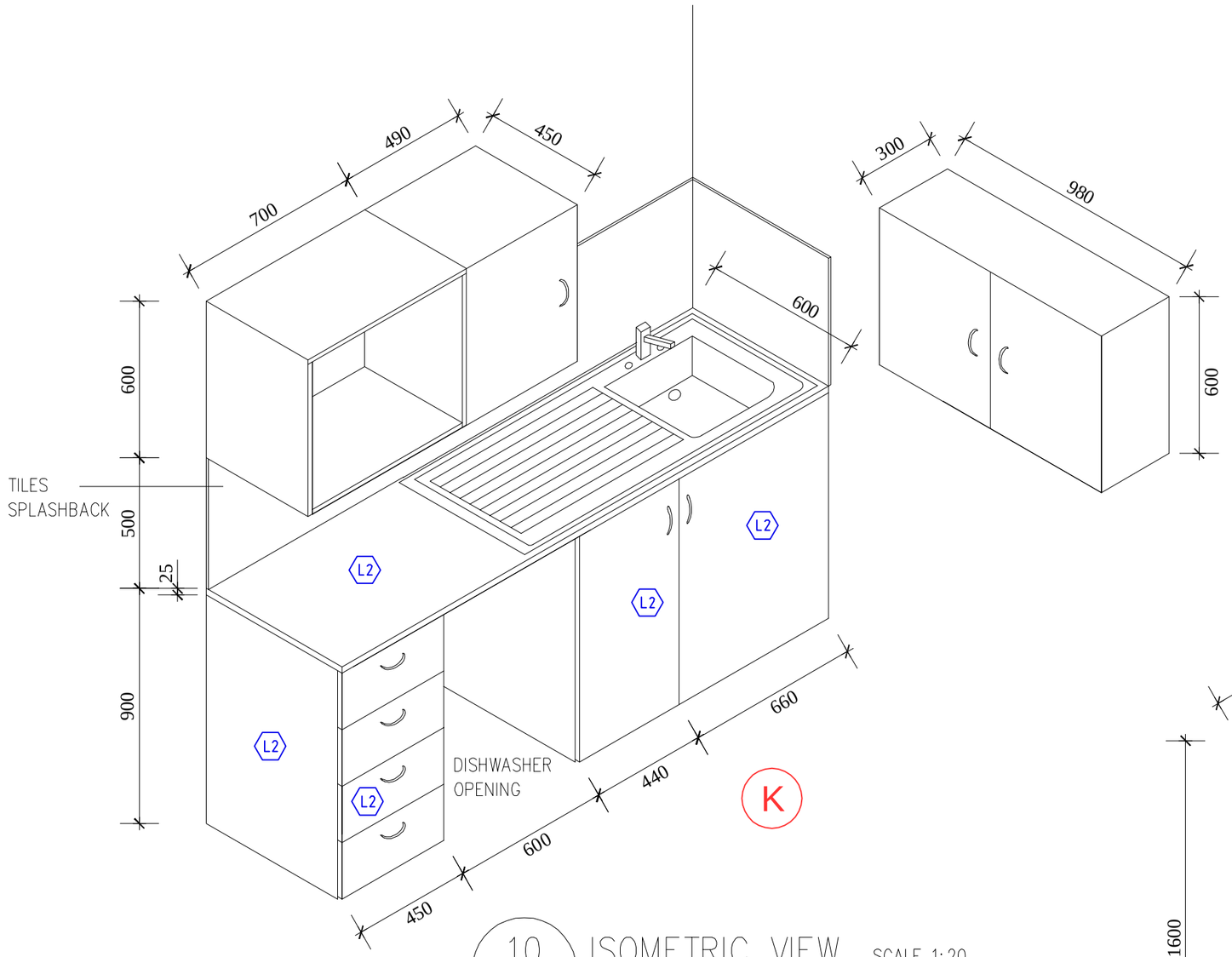

10 – ISOMETRIC VIEW SCALE 1:20
KITCHEN BENCH
GROUND FLOOR

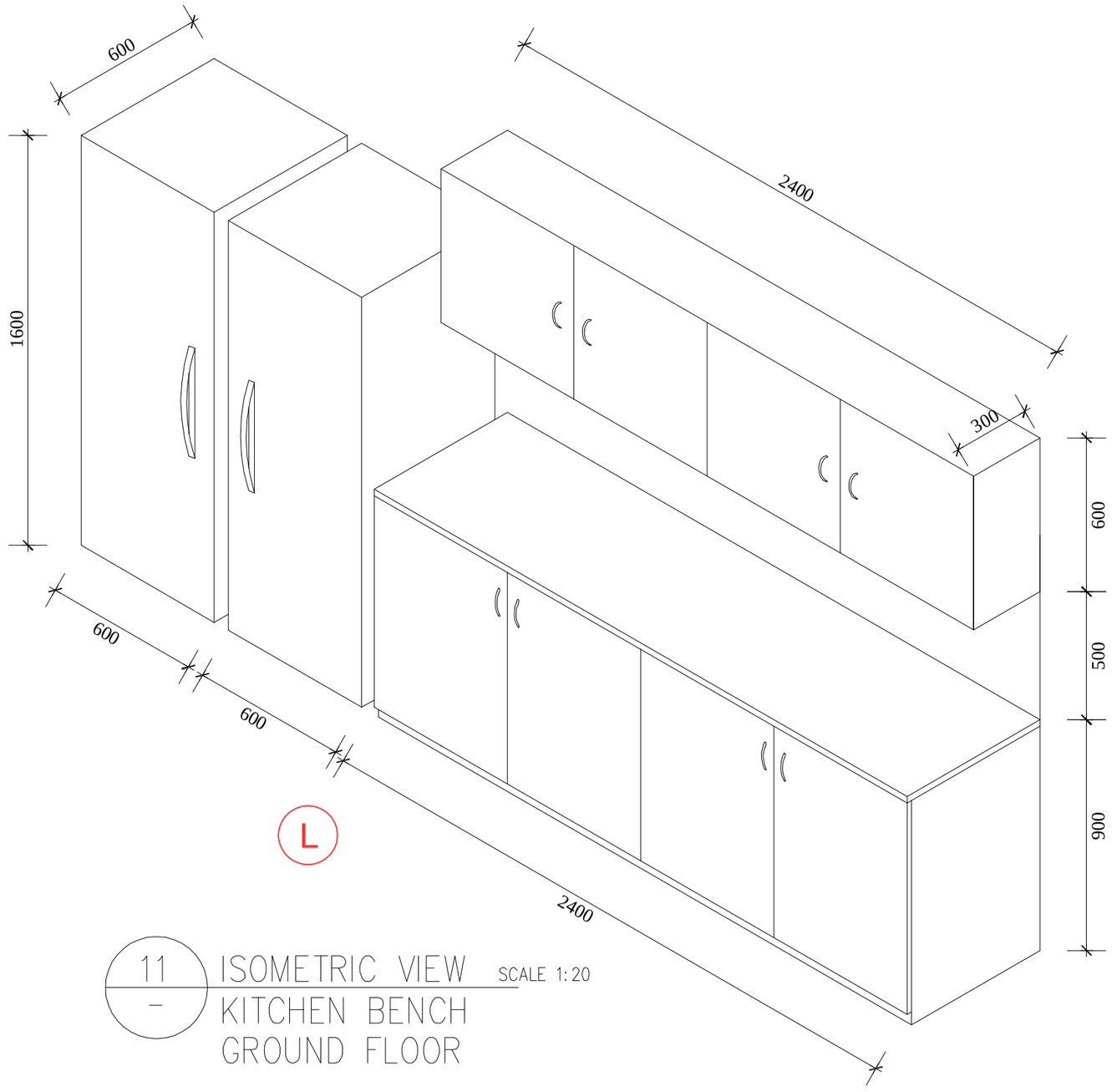

11 – ISOMETRIC VIEW SCALE 1:20
KITCHEN BENCH
GROUND FLOOR

AMENDMENTS

REV	DESCRIPTION	BY	DATE

CLIENT / PROJECT

DRAWING

FURNITURE DETAILS - 05

SCALE 0 2 4 8

BAR SCALE

NOTES

PRELIMINARY DESIGN

DRAWN	DATE DRAWN	CHECK	APPROVED	CLIENT
NK		MB	MK	

JOB NUMBER	DRAWING NUMBER	REVISION
		PD